GCS®
Global Conveyor Supplies

GENERAL DRAWING :_____ROLLER

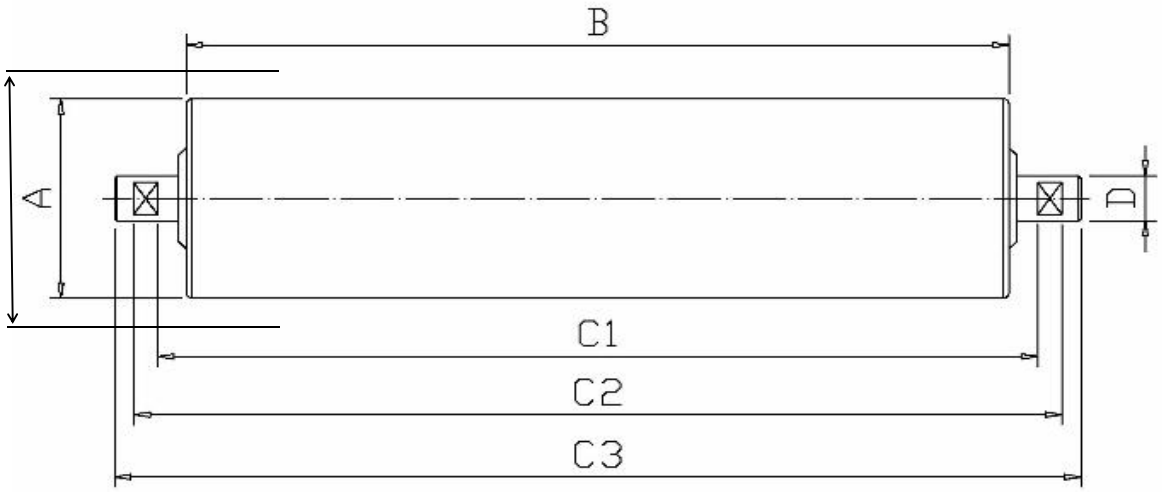

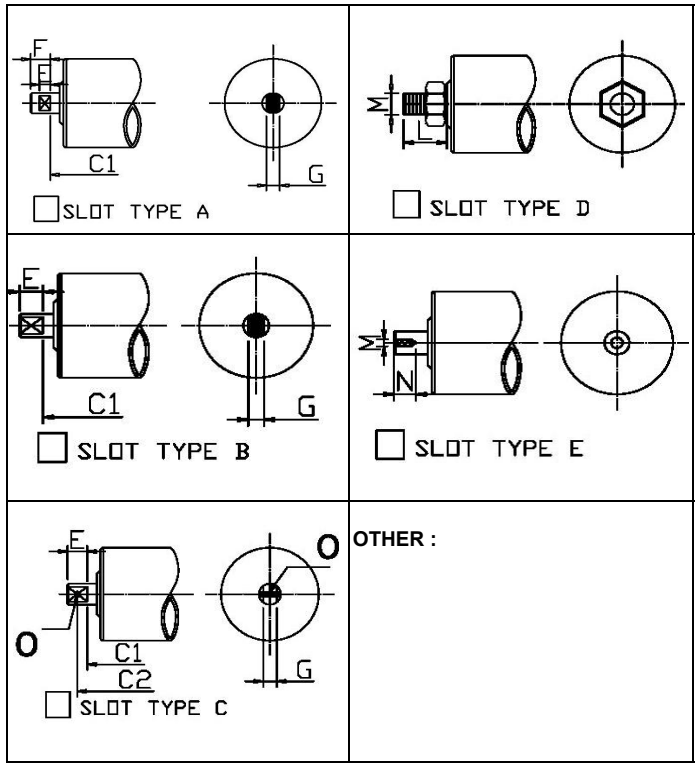

CUSTOMER	:
LOCATION	:
PIC NAME	:
TEL	:
EMAIL	:
INQUIRY REF.	:
DATE	:

CONVEYOR DATA

CONVEYOR CAPACITY	TPH
MATERIAL	
BELT SPEED	m/sec
BELT MASS	kg/m
BELT TENSION	kN
BELT TYPE	FABRIC
	STEEL CORD
TROUGH DEGREE	°
CARRY IDLER SPACING	mm

REMARKS :

SPECIFICATION

Roller Type	BELT WIDTH	MATERIAL		SLOT TYPE	BEARING	A1	A2	B	C1	C2	C3	D	E	F	G	L	M	O
		STEEL	HDPE															